VERIFICATIONREPORT FOR THE VCS PROJECT:

Beijing Guanting Wind Power Project Phase II and Phase II addition

Document Prepared By: China Quality Certification Center (CQC)

Report No: CDM-VER-2011-0051(verification)

Project Title	Beijing Guanting Wind Power Project Phase II and Phase II addition
Version	*3.0*

Report Title	Validation and Verification Report For the VCS Project: Beijing Guanting Wind Power Project Phase II and Phase II addition
Client	Beijing Jingneng Clean Energy Co., Ltd. Xibahe lane 6, Chaoyang District, Beijing
Pages	23
Date of Issue	02-05-2012
Prepared By	CQC
Contact	Add: Section 9, No.188, Nansihuan(the South Fourth Ring Road) Xilu (West Road), Beijing 100070, China Tel: 86-10-83886666 Email: zhanglixin@cqc.com.cn Website: http://www.cqc.com.cn/english/index.htm
Approved By	Vice President：Chen Wei
Work Carried Out By	Report finished by: Mr.Dong Chunsong; Ms.Duan Zhijie Report technical reviewed by: Ms. Zhang lixin

Summary:

China Quality Certification Centre (CQC) is commissioned by Beijing Jingneng Clean Energy Co., Ltd. to perform a verification the project -'Beijing Guanting Wind Power Project Phase II and Phase II addition' with regard to the requirements of VCS (version 3.1/3.2) and ACM0002 (Version 11).

The proposed project -'Beijing Guanting Wind Power Project Phase II and Phase II addition' was registered as a CDM project on Feb.28th 2011 and the UNFCCC reference number is 4413 and the verification of emission reductions achieved during the monitoring period from Dec.23rd, 2009 to Feb.27th, 2011 was conducted.

A risk-based approach and document review and an on-site visit combined method were followed by CQC team to perform this verification. In the course of the verification, 2 corrective action requests and 2 clarifications were raised and successfully closed out.

Based on the information and evidence observed and evaluated during document review and on-site assessment, CQC team confirms that:

- The project is implemented as per the registered CDM PDD;
- Monitoring report complies with the applied methodology;
- The monitoring is implemented as per monitoring plan of the registered CDM PDD;
- The GHG emission reductions are calculated without material misstatements.

Therefore, CQC team confirms the following statements:

Reporting period: from Dec.23rd, 2009 to Feb.27th, 2011.

Verified emission in the above reporting period:

- Baseline emissions: *210,126* tCO_2 equivalents;
- Project emissions:*0* tCO_2 equivalents;
- Leakages:*0* tCO_2 equivalents;
- Verified Carbon Units(VCUs): *210,126* tCO_2 equivalents

Table of Contents

1 Introduction 5

1.1 Objective 5

1.2 Scope and Criteria 5

1.3 Level of assurance 5

1.4 Summary Description of the Project 6

2 Validation Process, Findings and Conclusion 6

2.1 Validation Process 6

2.2 Validation Findings 6

2.2.1 Gap Validation 6

2.2.2 Methodology Deviations 6

2.2.3 New Project Activity Instances 6

2.3 Validation Conclusion 6

3 Verification Process 6

3.1 Method and Criteria 7

3.2 Document Review 7

3.3 Interviews 8

3.4 Site Inspections 8

3.5 Resolution of Any Material Discrepancy 9

4 Verification Findings 10

4.1 Project Implementation Status 10

4.2 Accuracy of GHG Emission Reduction or Removal Calculations 11

4.3 Quality of Evidence to Determine GHG Emission Reductions or Removals 16

4.4 Management and Operational System 21

5 Verification conclusion 22

Abbreviations

CAR	Corrective Action Request
NCPG	North China Power Grid
CDM	Clean Development Mechanism
CL	Clarification
CO_2	Carbon dioxide
CO_2e	Carbon dioxide equivalent
CQC	China Quality Certification Centre
FAR	Further Action Request
GHG	Greenhouse Gas
MR	Monitoring Report
PD	Project Description
PDD	Project Design Document
PP	Project Participant
VCS	Verified Carbon Standard
VCU	Verified Carbon Unit
UNFCCC	United Nations Framework Convention on Climate Change
VVM	Clean Development Mechanism Validation and Verification Manual

1 INTRODUCTION

China Quality Certification Centre (CQC) is commissioned by Beijing Jingneng Clean Energy Co., Ltd. to perform a verification of the project -'Beijing Guanting Wind Power Project Phase II and Phase II addition'. The monitoring period of this verification is from Dec.23rd, 2009 to Feb.27th, 2011. The report, completed as per the requirements of VCS (version 3.1/3.2)[/1/], contains the findings from the verification.

1.1 Objective

Verification is the independent review and ex-post determination by the verification body of the monitored reduction in GHG emissions during defined monitoring period. The purpose of this verification, by checking the objective evidences independently, is as follows:

- to verify whether the reductions generated by the project are in line with the VCS (version 3.1/3.2) and the information provided by the project participants contains all the necessary information to evidence the project's compliance with all criteria in the Verified Carbon Standard (VCS),
- to verify whether the implementation of the project is consistent with the description in the MR and PDD and the monitoring system is fully functional to generate VCUs without any double counting,
- to verify whether the data reported are accurate, complete, consistent, transparent and free of material error or omission by assessing the monitoring records and the emissions reduction calculation, and
- to validate whether the VCS requirements not covered by the CDM validation are met by the project.

1.2 Scope and Criteria

CQC team has employed a risk-based approach in the verification, focusing on the identification of significant risks and reliability of project design, system monitoring and generation of emission reductions according to the relevant applicable rules for VCUs verification under the VCS.

The verification of this VCS project are based on the Monitoring Report[/2//3/], the validated CDM project design document (PDD)[/4/] and report[/5/], CDM VVM ver.01.2[/6/], ACM0002 (Version 11)[/8/], CDM Monitoring & QC/QA Manual of this project[/7/] and the supporting documents and information, combined with the on-site assessment. Furthermore, publicly available information was considered as well.

This verification is not intended to provide any consulting services to the project participants. However, stated requests for clarifications and/or corrective actions may have provided input for improvement of the project monitoring towards reductions in the GHG emissions.

1.3 Level of assurance

As the VCS (version 3.1/3.2) only recognizes verified emission reductions, CQC has focused on providing a reasonable level of assurance that the emission reduction calculation methodology used is appropriate and correctly applied, and that emission reductions have been accurately monitored.

The verification report is based on CDM PDD[/4/], CDM validation report[/5/], VCS Monitoring Report[/2-3/], supporting evidence made available to the verifier and information collected through performing interviews and during the on-site visit.

1.4 Summary Description of the Project

Beijing Guanting Wind Power Project Phase II and Phase II addition is a wind power utilization project developed by Beijing Jingneng Clean Energy Co., Ltd. sited on northwest side of Beijing, the north bank of Guanting Reservoir which situated in south-east side of Langshan wind valley in Huailai County, Hebei Province, with geographical coordinates of north latitude of 40.3192°~40.3507° and east longitude of 115.6112°~115.6999° for Guanting Phase II and with north latitude of 40.3263°~40.3499° and east longitude of 115.5734~ 115.6144° for Phase II addition. The central geographical coordinates for Guanting Phase II are north latitude 40.3375° and east longitude 115.6750°, while the central geographical coordinates for Phase II addition are north latitude 40.3381° and east longitude 115.6029°.

The Project consists of two projects as follows:

1) Beijing Guanting Wind Power Project Phase II (hereafter referred to as the Guanting Phase II), the purpose of Guanting Phase II is to install 33 sets of wind turbines, with unit capacity of 1,500kW and the total installed capacity of which is 49.5MW. It is estimated that the feed-in electricity is approximately 92.784GWh per year.

2) Beijing Guanting Wind Power Project Phase II addition (hereafter referred to as the Phase II addition), the purpose of Phase II addition is to install 24 sets of wind turbines, with unit capacity of 1,500kW and the total installed capacity of which is 36MW. It is estimated that the feed-in electricity is approximately 68.335GWh per year.

A total of 57 sets of wind turbines are to be installed in the Project, with a total installed capacity of 85.5MW. It is estimated that the feed-in electricity is approximately 161.119GWh per year, which will be sold into North China Power Grid (NCPG) via an existed 110kV circuit after boosted by the No.2 main transformer of the 110kV substation of Beijing Guanting Wind Farm. The Project is a renewable energy project and it will achieve greenhouse gas (GHG) emission reductions of 153,099 tCO_2e annually by displacing power generation of those fossil fuel-fired power plants delivered to the NCPG under the baseline scenario.

During this monitoring period (23/12/2009 - 27/02/2011), the monitoring activities were conducted strictly in accordance with the monitoring plan in the registered PDD. The Project has operated without any accidental or emergency events that might impact the accuracy and/or implementation of monitoring activities. The net feed-in electricity during this period is 221,132.58MWh. The total emission reductions in this monitoring period are 210,126CO_2e.

2 VALIDATION PROCESS, FINDINGS AND CONCLUSION

2.1 Validation Process

N/A.

2.2 Validation Findings

2.2.1 Gap Validation

N/A.

2.2.2 Methodology Deviations

N/A.

2.2.3 New Project Activity Instances

N/A.

2.3 Validation Conclusion

N/A.

3 VERIFICATION PROCESS

3.1 Method and Criteria

CQC team based on the CDM Validation and Verification Manual (VVM, version 01.2)[/6/] and the relevant rules and steps as set out in VCS (version 3.1/3.2)[/1/], applied by a risk-based approach in the verification, focusing on the identification of significant risks for project implementation and the generation of VCUs. The verification consists of the following steps:

- a desk review of the registered CDM PDD and CDM validation report[/4-5/], the VCS MR[/2-3/],the CDM QA/QC manual[/7/],performance records and supporting documents submitted by PPs;
- on-site assessment;
- background investigation and follow-up interviews with personnel of the PPs;
- raising CARs, CLs, FARs when appropriate;
- resolution CARs/CLs and issuing the final verification report;
- the final verification report including the verification findings underwent a technical review before being submitted to the PPs and requesting issuance of the VCUs according to CQC internal procedure CDMP09.

Based on the CDM requirements of competency, experience and qualified sectoral scopes, CQC composed a verification team in accordance with CQC's internal procedures.

Table 3-1: Verification Team

Qualification	Last name	First name	Country	Qualified TAs under CDM
Verification verifier (Team leader)	Dong	Chunsong	China	TA1.2/13.1
Verification verifier	Duan	Zhijie	China	TA1.2/13.1/13.2/15.1
Technical reviewer	Zhang	Lixin	China	TA1.2/13.1

The criteria of this verification include the relevant rules and steps as set out in VCS (version 3.1/3.2). The methodologies and tools applied for the proposed project are listed as follows:

- ACM0002 (Version 11) – "Consolidated baseline methodology for grid-connected electricity generation from renewable sources"[/8/];
- Demonstration and Assessment of Additionality, version 05.2;
- Tool to calculate the emission factor for an electricity system, version 02.

For more information regarding the methodology, please refer to the link:

http://cdm.unfccc.int/methodologies/PAmethodologies/approved.html

3.2 Document Review

PP submitted the Monitoring Report (Version 1)[/2/] to CQC on Oct. 25th 2011. Furthermore, the verification team has used technical information from sources other than Monitoring Report such as registered CDM PDD[/4/], Validation report[/5/], approved methodologies which are related to the project design. Then, a desk review of documentation was conducted by CQC team according to the VCS (version 3.1/3.2) guidelines.

3.3 Interviews

CQC verification team, Mr.Dong Chunsong and Ms. Duan Zhijie, conducted an on-site visit on Jan.4th 2012 to confirm selected information and to resolve issues identified during the document review. During the on-site visit, the representatives of the PP and the consultant were interviewed. The key interviewee and main topics of the interviews for on-site visit are summarized in Table 3-2.

Table 3-2: Site-visit Interviewee and Interview Topics

Date	Interviewee	Organization	Interview Topics
Jan.4th 2012	Ms.Shen Chunyan Project manager Mr.Wang Zheng	Beijing Jingneng Clean Energy Co., Ltd. (Project owner)	-Project design and implementation; -Hydro turbines & generators operation; -Equipments maintenance and repair; -Electric meters calibration and verification; -Monitoring plan and management procedure; - Monitor data; - Training and QA/QC; - GHG calculation; - Environmental impacts; - Compliance with national and local laws and regulations for calibration and verification; - Monitoring plan; - GHG calculations; - Monitored data and monitoring report.
	Dr.Zheng Zhaoning Ms.Xu Hongmei	Goldchina Consultancy International Co., Ltd.(Consultant)	

3.4 Site Inspections

On Jan.4th 2012, CQC verification team performed an on-site visit at this project. During this visit, CQC verification team:

- Confirmed the implementation and operation of the project;
- Confirmed issues identified during document review;
- Confirmed the correct procedure of implementation for operations and data collection;
- Cross-checked information provided in the MR documentation with other sources (raw data);
- Checked the monitoring equipments against the requirements of the PD and the approved methodology, including calibrations, maintenance, etc.;
- Identified if the quality control and quality assurance procedures are in place to prevent or correct errors or omissions in the reported parameters.

3.5 Resolution of Any Material Discrepancy

CQC team establishes verification findings based on the results of evaluation of the collected verification evidence against verification criteria.

While aiming to resolve any outstanding issues which needed to be clarified about the project implementation and monitoring, findings established during the verification can either be seen as a non-fulfillment of the VCU Verification Criteria or where a risk to the fulfillment of project objectives is identified.

Corrective action requests (**CAR**) are issued, where:

- mistakes have been made with a direct influence on project results requiring adjustments of the VCUs monitoring report, or
- applicable methodological specific requirements have not been met.

A clarification action request (**CL**) may be used where additional information is needed to fully clarify an issue.

A forward action request (**FAR**) should be issued, where:

- the actual project monitoring and reporting practices requires attention and /or adjustment for the next consecutive verification period, or
- an adjustment of the MP is recommended.

In the context of FARs, risks have been identified, which may endanger the delivery of high quality emissions reductions in the future, i.e. by deviations from standard procedures. As a consequence, such aspects should receive a special focus during the next consecutive verification. A FAR may originate from the lack of data sustaining claimed emission reductions.

During this verification, Two CARs and two CLs were raised and summarized as following table.

Table 3-3: Discrepancy findings during this verification

Discrepancy findings	Summary of project owner response	Verification conclusion
CAR01 The Project Start Date 20/06/2009 in the MR version 01 was the construction start date of Guanting Phase II, which was inconsistent with the definition of VCS standard version 3.2.	The project start date was changed into 23/12/2009 according to VCS standard version 3.2. and the clarification from the grid company[/9/]. Please see Page 3 of MR version 02	The clarification from the grid company[/9/] on the project start generating electricity was supplied to CQC verification team and the start date is 23/12/2009 as per this evidence[/9/]. The Project Start Date was chosen as 23/12/2009 is consistent with the definition of VCS standard version 3.2. So **CAR01** is closed out.
CAR02 During the document review and onsite visit, it was found that the serial numbers of electricity meters M14 and M14' in the MR version 01 was inconsistent with related calibration	It was a typing error. The serial numbers of meters M14 and M14' are revised according to the information of the installed meters in	CQC verification team has checked the nameplate and relate calibration reports of the installed meters M14 and M14' and confirms that the serial numbers of

Discrepancy findings	Summary of project owner response	Verification conclusion
reports and real installed meters.	Project site. Please see Page 12 of MR version 02.	electricity meters M14 and M14' in the MR version 02 are consistent with the real installed ones. So **CAR02** is closed out.
CL01 The calculation of electricity export to the grid by this project is inconsistent with the monitoring plan of the PDD and further clarification on this calculation was not supplied in the MR version 01.	The clarification of the calculation deviation of electricity export to the grid by this project was added into the MR. Please Page 18-20 of the MR version 02	The detailed clarification of the calculation deviation of electricity export to the grid by this project was added into the MR version 02 and the calculation deviation is conservative. So **CL01** is closed out.
CL02 The explanation on the increase rate of actual emission reduction in the MR version 01 comparing with the ex-ante estimated emission reductions in registered PDD is not sufficient and transparent.	The explanation on the increase rate of actual emission reduction was added into the MR. Please see Page 21 -22 of the MR version 02	The explanation on the increase rate of actual emission reduction was added into the MR version 02 and relate evidence/20-21/ was supplied too. So **CL02** is closed out.

4 VERIFICATION FINDINGS

4.1 Project Implementation Status

The verification team has performed an on-site visit to verify the real implementation of the project against the description in the registered CDM PDD.

Beijing Guanting Wind Power Project Phase II and Phase II addition developed by Beijing Jingneng Clean Energy Co., Ltd., involves construction and operation of a wind power project that is sited on Northwest side of Beijing, the north bank of Guanting Reservoir which situated in south-east side of Langshan wind valley in Huailai County, Hebei Province, P.R. of China. The Project was commenced on 23/12/2009, The Project has been registered as a CDM project on 28/02/2011(UNFCCC registration reference number: 4413).

All facilities and equipments as described in the registered PDD were in place and the PP operated the Project as per the PDD. The Project consists of two projects as follows:

1) Beijing Guanting Wind Power Project Phase II (hereafter referred to as the Guanting Phase II), the purpose of Guanting Phase II is to install 33 sets of 1.5MW wind turbine-generator and the total installed capacity is 49.5MW. The operation was started on 23/12/2009.

2) Beijing Guanting Wind Power Project Phase II addition (hereafter referred to as the Phase II addition), the purpose of Phase II addition is to install 24 sets of 1.5MW wind turbine-generator and the total installed capacity is 36MW. The operation was started on 23/12/2009.

During the document and onsite visit, it was found that the Project Start Date 20/06/2009 in the MR version 01 was the construction start date of Guanting Phase II, which was inconsistent with the definition of VCS standard version 3.1/3.2. With respect to this issue, CQC verification team raised ***CAR01*** and successfully closed out by PP. (Detailed information about this CAR please

see table 3-3 above.)

The total installed capacity of the Project is 85.5MW. 57 sets of wind turbine with unit capacity of 1.5MW were well installed by the Project to generate clean renewable electricity. Wind turbines and their corresponding generators employed by the Project were provided by Xinjiang Goldwind Science and Technology Co., Ltd. The major technical parameters of turbines and generators of the project are listed in the following table:

Table 4-1. Major technical parameters of turbines and generators

Item		Unit	
Wind turbine	Type		Gold wind 82/1500
	Rated power	kW	1,500
	Rotor diameter	m	82
	Rotor swept area	m^2	5,282
	Cut in wind speed	m/s	3
	Rated wind speed	m/s	10.3
	Cut out wind speed	m/s	22
	Hub height	m	65
Generator	Type		Permanent-magnet synchronousgenerator
	Rated power	kW	1,500
	Power factor		~0.95
	Rated voltage	V	690

The electricity generated by the Project is supplied to the North China Power Grid (NCPG) as per the grid connection agreement and Power Sales & Purchase Agreements (PPA)[/10/] signed between the project owner and local power grid company, displacing part of electricity generated by NCPG which is dominated by fossil fuel fired power plants. During the onsite visit, CQC verification team has checked all the metering equipments involved in the metering system and found they are all well installed and in good condition. As the metering system is quite complicated, the specification and calibration information of all these metering equipments are stated in section 4.2 of this report in detail.

The previous validation report has been checked by the verification team and no remaining issue was found. Meanwhile there is no methodology deviation during previously validation.

Therefore, the verification team can confirm that PP implemented and operated the project activity in accordance with the PDD. The actual project activity does not contain changes which may impact the additionality or scale of the project activity or applicability of baseline methodology.

4.2 Accuracy of GHG Emission Reduction or Removal Calculations

Emission reductions were calculated ex-post and in accordance with the registered PDD which conforms to the applied methodologies.

According to the registered PDD, the following data and parameters need to be monitored for determining the ERs and the way the verification team has verified the values in the monitoring reports are described below (As the installation of M9/M9'-M13/M13' is later than 22/08/2010 when Yangqing Project started to operate, it is no need to monitor electricity supplied by line 1 to 5 and so the monitoring parameters related to Line 1to 5 are not included in this section. The influence of this issue is presented in section 4.3 below):

Data Unit / Parameter:	$EG_{Guantingtotrans,y}$

<table>
<tr><td>Data unit:</td><td>MWh</td></tr>
<tr><td>Description:</td><td>Electricity supplied by the Guanting Project in year y.</td></tr>
<tr><td>Process of verification</td><td>According to the registered PDD:
The real value of $EG_{Guantingtotrans,y}$ will be measured by the electricity meters M5/M6. Cross check by readings from the electricity meter M5 and the electricity meter M6.
Directly measured by electricity meters with precision 0.2S installed at the outlet of No. 1 main transformer. The recording frequency will be continuously measured and monthly recorded and aggregated. The proportion of data to be monitored is 100% and the data will be archived electronically and kept during the crediting period and 2 years after. The regular calibration and on-site verification should be implemented as per the Technical administrative code of electric energy metering (DL/T 448-2000) to ensure the precision of electricity meters. Electricity meters should be calibrated every year.
The verification findings during on-site visit are as follows:
Two electricity meters, M5 as main meter and M6 as backup meter, with mutual accuracy 0.2S were well installed onsite and was checked by CQC team. The electricity meter is in good condition. Site engineer checks the condition of the electricity meters every day. During verification it was confirmed that no breakdown occurred during this monitoring period. $EG_{Guantingtotrans,y}$ was monitored by the two electricity meters continuously and manually recorded daily. The manually raw records[/11/] were supplied to verification team during the onsite visit. The values of $EG_{Guantingtotrans,y}$ were aggregated into monthly data based on manually raw records. The values of M5 are used for ER calculation and listed in appendix ER calculation spreadsheet[/12/].
Calibration of the electricity meters was conducted by the accredited third-party organization, Beijing Electronic Metrological Measuring Institute[/14/], and the valid period can cover this monitoring period. Calibration certificates[/13/] were provided and the calibration was carried out in accordance with the registered PDD. The detailed information on calibration and the two meters are listed below table.
<table>
<tr><th>Meter</th><th>Serial number</th><th>calibration dates</th><th>valid period</th><th>Accuracy</th></tr>
<tr><td rowspan="3">M5</td><td rowspan="3">2005665309</td><td>01/12/2009</td><td>01/12/2009-30/11/2010</td><td rowspan="3">0.2S</td></tr>
<tr><td>20/04/2010</td><td>20/04/2010-19/04/2011</td></tr>
<tr><td>01/01/2011</td><td>01/01/2011-31/12/2012</td></tr>
<tr><td rowspan="3">M6</td><td rowspan="3">2005665308</td><td>01/12/2009</td><td>01/12/2009-30/11/2010</td><td rowspan="3">0.2S</td></tr>
<tr><td>20/04/2010</td><td>20/04/2010-19/04/2011</td></tr>
<tr><td>01/01/2011</td><td>01/01/2011-31/12/2012</td></tr>
</table></td></tr>
</table>

Data Unit / Parameter:	$EG_{PJ+Yqtotrans,y}$
Data unit:	MWh
Description:	Electricity supplied by the Project and the Yanqing Project in year y.

<table>
<tr><td>Process of verification</td><td>
According to the registered PDD:
The real value of $EG_{PJ+Yqtotrans,y}$ will be measured by the electricity meters M7/M8. Cross check by readings from the electricity meter M7 and the electricity meter M8.
Directly measured by electricity meters with precision 0.2S installed at the outlet of No. 2 main transformer. The recording frequency will be continuously measured and monthly recorded and aggregated. The proportion of data to be monitored is 100% and the data will be archived electronically and kept during the crediting period and 2 years after. The regular calibration and on-site verification should be implemented as per the Technical administrative code of electric energy metering (DL/T 448-2000) to ensure the precision of electricity meters. Electricity meters should be calibrated every year.
The verification findings during on-site visit are as follows:
Two electricity meters, M7 as main meter and M8 as backup meter, with mutual accuracy 0.2S were well installed onsite and was checked by CQC team. The electricity meter is in good condition. Site engineer checks the condition of the electricity meters every day. During verification it was confirmed that no breakdown occurred during this monitoring period. $EG_{PJ+Yqtotrans,y}$ was monitored by the two electricity meters continuously and manually recorded daily. The manually raw records[/11/] were supplied to verification team during the onsite visit. The values of $EG_{PJ+Yqtotrans,y}$ were aggregated into monthly data based on manually raw records. The values of M7 are used for ER calculation and listed in appendix ER calculation spreadsheet[/12/].
Calibration of the electricity meters was conducted by the accredited third-party organization, Beijing Electronic Metrological Measuring Institute, and the valid period can cover this monitoring period. Calibration certificates[/15/] were provided and the calibration was carried out in accordance with the registered PDD. The detailed information on calibration and the two meters are listed below table.
<table>
<tr><th>Meter</th><th>Serial number</th><th>calibration dates</th><th>valid period</th><th>Accuracy</th></tr>
<tr><td rowspan="3">M7</td><td rowspan="3">2005665307</td><td>01/12/2009</td><td>01/12/2009-30/11/2010</td><td rowspan="3">0.2S</td></tr>
<tr><td>20/04/2010</td><td>20/04/2010-19/04/2011</td></tr>
<tr><td>01/01/2011</td><td>01/01/2011-31/12/2012</td></tr>
<tr><td rowspan="3">M8</td><td rowspan="3">2005665310</td><td>01/12/2009</td><td>01/12/2009-30/11/2010</td><td rowspan="3">0.2S</td></tr>
<tr><td>20/04/2010</td><td>20/04/2010-19/04/2011</td></tr>
<tr><td>01/01/2011</td><td>01/01/2011-31/12/2012</td></tr>
</table>
</td></tr>
</table>

Data Unit / Parameter:	$EG_{totaltoGrid,y}$
Data unit:	MWh
Description:	Electricity supplied to the grid by the Project and other projects in year y.

Process of verification	According to the registered PDD: The real value of $EG_{totaltoGrid,y}$ will be measured by gateway meters M1/M3. Cross check by readings from the electricity meter M1 and the electricity meter M3. Directly measured by gateway meters with precision 0.2S. The recording frequency will be continuously measured and monthly recorded and aggregated. The proportion of data to be monitored is 100% and the data will be archived electronically and kept during the crediting period and 2 years after. The regular calibration and on-site verification should be implemented as per the Technical administrative code of electric energy metering (DL/T 448-2000) to ensure the precision of electricity meters. Electricity meters should be calibrated every year. Double check by receipt of sales and the sum of $EG_{Guantingtotrans,y}$ and $EG_{PJ+Yqtotrans,y}$. The verification findings during on-site visit are as follows: Two electricity meters, M1 as main meter and M3 as backup meter, with mutual accuracy 0.2S were well installed onsite and was checked by CQC team. The electricity meters are in good condition. Site engineer checks the condition of the electricity meters every day. During verification it was confirmed that no breakdown occurred during this monitoring period. $EG_{totaltoGrid,y}$ was monitored by the two electricity meters continuously and manually recorded daily. The manually raw records[/11/] were supplied to verification team during the onsite visit. The values of $EG_{totaltoGrid,y}$ were aggregated into monthly data based on manually raw records. The values of M1 are used for ER calculation and listed in appendix ER calculation spreadsheet[/12/]. Calibration of the electricity meters was conducted by the accredited third-party organization, Beijing Electronic Metrological Measuring Institute, and the valid period can cover this monitoring period. Calibration certificates[/16/] were provided and the calibration was carried out in accordance with the registered PDD. The detailed information on calibration and the two meters are listed below table.

Meter	Serial number	calibration dates	valid period	Accuracy
M1	2001124467	13/11/2009	13/11/2009-14/11/2010	0.2S
		20/04/2010	20/04/2010-19/04/2011	
		01/01/2011	01/01/2011-31/12/2012	
M3	2001124470	13/11/2009	13/11/2009-14/11/2010	0.2S
		20/04/2010	20/04/2010-19/04/2011	
		01/01/2011	01/01/2011-31/12/2012	

Data Unit / Parameter:	$EG_{Gridtototal,y}$
Data unit:	MWh
Description:	Electricity consumed by the Project and other projects from the grid in year y.

<table>
<tr><td>Process of verification</td><td>
According to the registered PDD:
The real value of $EG_{Gridtototal,y}$ will be measured by gateway meters M2/M4.

Directly measured by gateway meters with precision 0.2S. The recording frequency will be continuously measured and monthly recorded and aggregated. The proportion of data to be monitored is 100% and the data will be archived electronically and kept during the crediting period and 2 years after. The regular calibration and on-site verification should be implemented as per the Technical administrative code of electric energy metering (DL/T448-2000) to ensure the precision of electricity meters. Electricity meters should be calibrated every year. Double check by receipt of sales.

The verification findings during on-site visit are as follows:

Two electricity meters, M2 as main meter and M4 as backup meter, with mutual accuracy 0.2S were well installed onsite and was checked by CQC team. The electricity meters are in good condition. Site engineer checks the condition of the electricity meters every day. During verification it was confirmed that no breakdown occurred during this monitoring period. $EG_{Gridtototal,y}$ was monitored by the two electricity meters continuously and manually recorded daily. The manually raw records/11/ were supplied to verification team during the onsite visit. The transaction between the project owner and the grid company is based on main meter M2 as it was in good condition during this monitoring period. The values of M2 are used for ER calculation and listed in appendix ER calculation spreadsheet/12/. $EG_{Gridtototal,y}$ is the sum of electricity consumed by the three projects, Guangting project, Yanqing project and this proposed project, and covers the period from 23/12/2009 to 19/03/2011 which is longer than this monitoring period. So CQC team confirms that PP use the values of $EG_{Gridtototal,y}$ in VCUs calculation is conservative and acceptable.

Calibration of the electricity meters was conducted by the accredited third-party organization, Beijing Electronic Metrological Measuring Institute. Calibration certificates/17/ were provided and the calibration was carried out in accordance with the registered PDD. The detailed information on calibration and the two meters are listed below table.
<table>
<tr><th>Meter</th><th>Serial number</th><th>calibration dates</th><th>valid period</th><th>Accuracy</th></tr>
<tr><td rowspan="3">M2</td><td rowspan="3">2001124469</td><td>13/11/2009</td><td>13/11/2009-14/11/2010</td><td rowspan="3">0.2S</td></tr>
<tr><td>20/04/2010</td><td>20/04/2010-19/04/2011</td></tr>
<tr><td>01/01/2011</td><td>01/01/2011-31/12/2012</td></tr>
<tr><td rowspan="3">M4</td><td rowspan="3">2001124468</td><td>13/11/2009</td><td>13/11/2009-14/11/2010</td><td rowspan="3">0.2S</td></tr>
<tr><td>20/04/2010</td><td>20/04/2010-19/04/2011</td></tr>
<tr><td>01/01/2011</td><td>01/01/2011-31/12/2012</td></tr>
</table>
</td></tr>
</table>

Data Unit / Parameter:	$EG_{Yanqingtotrans,y}$
Data unit:	MWh
Description:	Electricity supplied by Yanqing Project in year y.

<table>
<tr><td>Process of verification</td><td>
According to the registered PDD:
The real value of $EG_{Yanqingtotrans,y}$ will be measured by gateway meters M14/M14'.
Directly measured by meters with precision no less than 0.5S installed at the line 6. The recording frequency will be continuously measured and monthly recorded and aggregated. The proportion of data to be monitored is 100% and the data will be archived electronically and kept during the crediting period and 2 years after. The regular calibration and on-site verification should be implemented as per the Technical administrative code of electric energy metering (DL/T448-2000) to ensure the precision of electricity meters. Electricity meters should be calibrated every year. Cross check by readings from the electricity meter M14 and the electricity meter M14'.

The verification findings during on-site visit are as follows:

Two electricity meters, M14 as main meter and M14' as backup meter, with mutual accuracy 0.5S were well installed onsite and was checked by CQC team. The electricity meters are in good condition. During verification it was confirmed that no breakdown occurred during this monitoring period. $EG_{Yanqingtotrans,y}$ was monitored continually by the two meters and the monthly records of M14 are used for ER calculation and listed in appendix ER calculation spreadsheet[/12/].
During the document review and onsite visit, it was found that the serial numbers of electricity meters M14 and M14'in the MR version 01 was inconsistent with related calibration reports and real installed meters. With respect to this issue, CAR02 was raised during this verification and successfully closed out by PP. (Detailed information about this CAR please see table 3-3 above.)

Calibration of the electricity meters was conducted by the accredited third-party organization Huabei Electric science research Institute Co., LTD. Calibration certificates[/18/] were provided and the calibration was carried out in accordance with the registered PDD. The detailed information on calibration and the two meters are listed below table.
<table>
<tr><th>Meter</th><th>Serial number</th><th>calibration dates</th><th>valid period</th><th>Accuracy</th></tr>
<tr><td rowspan="2">M14</td><td rowspan="2">96716065</td><td>19/08/2010</td><td>19/08/2010-18/08/2011</td><td rowspan="2">0.5S</td></tr>
<tr><td>20/12/2010</td><td>20/12/2010-19/12/2011</td></tr>
<tr><td rowspan="2">M14'</td><td rowspan="2">96716082</td><td>19/08/2010</td><td>19/08/2010-18/08/2011</td><td rowspan="2">0.5S</td></tr>
<tr><td>20/12/2010</td><td>20/12/2010-19/12/2011</td></tr>
</table>
</td></tr>
</table>

According to the registered CDM PDD and applied methodologies, there is no other data or parameter required to be monitored ex-post. According to the detailed verification process stated in upper part, CQC verification team is able to confirm that the monitoring has been carried out in accordance with the monitoring plan contained in the PDD. All the parameters need to be monitored have been verified against the registered PDD and the same in the monitoring report, and found complete and accurate.

4.3 Quality of Evidence to Determine GHG Emission Reductions or Removals

The verification of monitoring parameters used for the determination of the emission reductions are prescribed in section 4.2 of this report. All the data and parameters in Monitoring Report version 02 were in compliance with the registered CDM PDD.

Guanting Phase II and Phase II addition shares the gateway meters (main meter M1/backup

meter M3) with Guanting Project since the project stare date 23/12/2009. Two pairs of new bi-directional meters with accuracy 0.2S were installed at the outlet of the No.1 main transformer (main meter M5/backup meter M6), the on-site main transformer of Guanting Project, and the No.2 main transformer (main meter M7/backup meter M8), to which the Project was connected.

On 23/08/2010, Yanqing Project was operated and connected to the No.2 main transformer and share the electricity meters (main meter M7/ backup meter M8) with the Project. So, 1 pair of new electricity with accuracy 0.5S was installed at the line 6 for measuring the electricity delivered by the Yanqing Project. In 12/2010, for satisfying the requirement of the monitoring plan of the registered PDD, 5 pairs of new electricity meters (i.e. M9/M9' to M13/M13') with accuracy 0.5S were installed at each line from line 1 to line 5 (line 1-line 3 for the Guanting Phase II, line 4 and line 5 for the Guanting Phase II addition) respectively to measure the electricity supplied by the Project.

The metering system of this proposed project is quite complicated, the connection structure and the meter locations are presented below to help understanding the quality of Evidence to Determine GHG Emission Reductions or Removals.

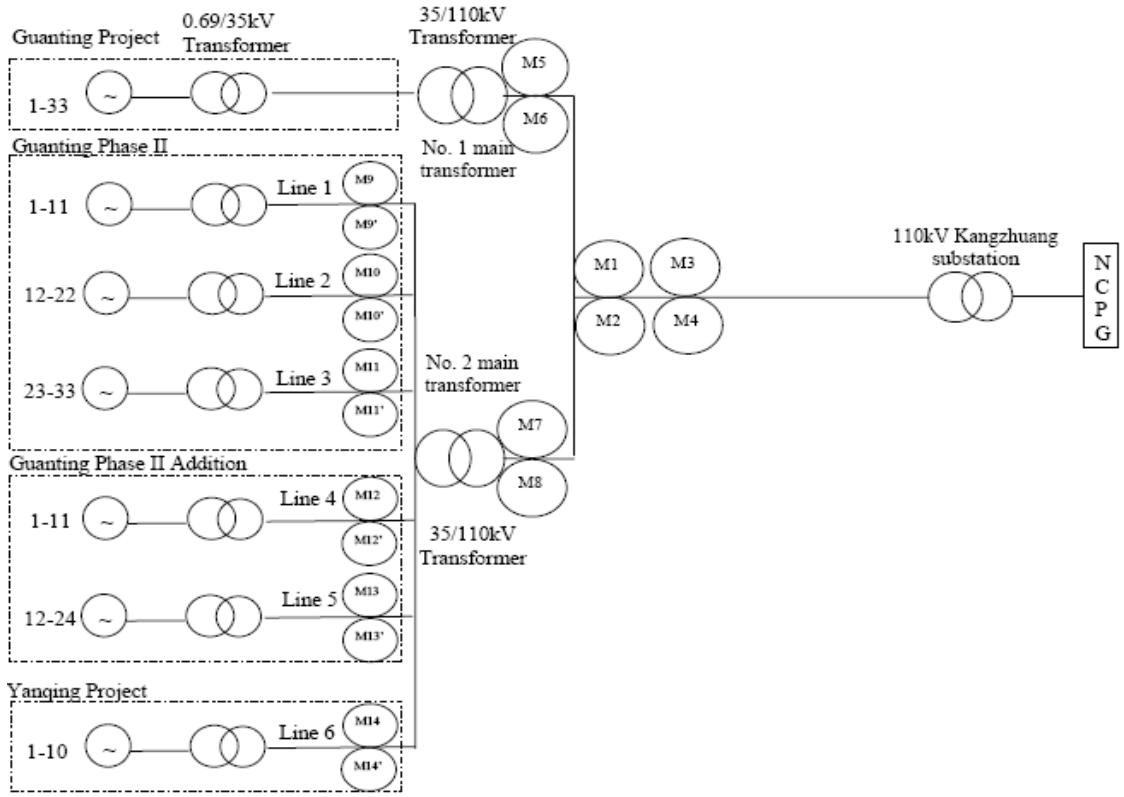

Note: The No. 1 main transformer and the No. 2 main transformer are located at the 110kV substation of Beijing Guanting Wind Farm one by one, and all of meters are located at the Substation.
Meters M5/M6 are installed at the outlet of No. 1 main transformer, meters M7/M8 are installed at the outlet of No. 2 main transformer, meters M1-M4 are installed near to M5-M8. The meters M1-M8 are located at one cabinet(*110kV Line* cabinet). So, the line loss from M5/M6 and M7/M8 to M1-M4 is same and can be omitted.
Those meters M9/M9'-M14/M14' are installed the inlet of the No. 2 main transformer. Those meters M9/M9'-M14/M14' are located at one room. The distance between the room M1-M8 located and the room M9/M9'-M14/M14' located is no more than 30m.

Figure 4-1. The connection structure and the meter locations

According to the registered PDD[4] and the monitoring report version 2[3], the emission reduction **ER_y** for the project is the baseline emissions **BEy** minus the project emissions **PE_y** and leakage **Ly**. The detailed aggregated datum and calculation process of **BEy**, **PEy** and **Ly** are provided in the appendix ER calculation spreadsheet and summary calculation of **BEy**, **PEy** and **Ly** are stated below:

4.3.1 Baseline Emissions

Baseline emissions in this monitoring period are calculated by multiplying the fixed baseline emission factor which has been determined in the registered PDD of the project ex ante by net electricity supplied by the Project to the NCPG in the monitoring period.

$$BE_y = EG_y \times EF_y \quad (1)$$

$$EG_y = EG_{PJtoGrid,y} - EG_{GridtoPJ,y} \quad (2)$$

So,

$$BE_y = (EG_{PJtoGrid,y} - EG_{GridtoPJ,y}) \times EF_y \quad (3)$$

Where

BE_y =Baseline emissions of the Project in the monitoring period.

$EG_{PJtoGrid,y}$ =Electricity exported by the Project to the North China Power Grid.

$EG_{GridtoPJ,y}$ = Electricity imported by the Project from the North China Power Grid.

EG_y =Net electricity exported by the Project to the North China Power Grid.

EF_y =Baseline emission factor in the monitoring period (calculated ex-ante and will not be changed during the first crediting period). As per the registered PDD of the project the value is 0.950225tCO_2e/MWh and this value will be also used in VCUs calculation during this monitoring period.

(1) From 23/12/2009 to 22/08/2010, Yangqing Project was not operated. The electricity exported by the Project to the North China Power Grid ($EG_{PJtoGrid,y}$) after sharing gateway meters with other projects is calculated as the registered CDM PDD as follow:

$$EG_{PJtoGrid,y} = \frac{EG_{totaltoGrid,y}}{EG_{PJtotrans,y} + EG_{Guantingtotrans,y}} \times EG_{PJtotrans,y} \quad (4)$$

(2) Since 23/08/2010, Yangqing Project was operated. The electricity exported by the Project to the North China Power Grid ($EG_{PJtoGrid,y}$) should be calculated as follow equations as per the registered PDD:

$$EG_{PJ+YqtoGrid,y} = \frac{EG_{totaltoGrid,y}}{EG_{PJ+Yqtotrans,y} + EG_{Guantingtotrans,y}} \times EG_{PJ+Yqtotrans,y} \quad (5)$$

$$EG_{PJtoGrid,y} = \frac{EG_{PJtotrans,y}}{EG_{PJtotrans,y} + EG_{Yanqingtotrans,y}} \times EG_{PJ+Yqtogrid,y} \quad (6)$$

But the installation of M9/M9'-M13/M13' is later than 23/08/2010, and the readings from

M9/M9'-M13/M13' are inaccurate before 21/12/2010.So it is impossible to use the monitoring records of M9/M9'-M13/M13' to calculate $EG_{PJtoGrid,y}$ during 23/08/2010 to 21/12/2010.Although it is possible to use the monitoring records of M9/M9'-M13/M13' to calculate $EG_{PJtoGrid,y}$ after 21/12/2010. PP chooses a conservative deviation to calculate $EG_{PJtoGrid,y}$ from equation (6) above to equation (7) during the rest monitoring period from 23/08/2010 to 27/02/2011 for simplification as follows:

$$EG_{PJtoGrid,y} = EG_{PJ+Yqtogrid,y} - EG_{Yanqingtotrans,y} \quad (7)$$

Although PP claims that equation (7) is conservative comparing to equation (6) in $EG_{PJtoGrid,y}$ calculation in the MR version 01. The further clarification on this claim was not provided in the MR version 01. With respect to this issue, ***CL01*** was raised during this verification and successfully closed out by PP. (Detailed information about this CL please see table 3-3 above and the revised MR version 02.) As a result, CQC team confirms this deviation is conservative and acceptable. The monitoring result of $EG_{PJtoGrid,y}$ is presented as the following table:

Table 4-2: The monitoring result of $EG_{PJtoGrid,y}$

Period	$EG_{PJtogrid}$(MWh)
23/12/2009-27/12/2009	413.60
28/12/2009-27/01/2010	5,922.40
28/01/2010-27/02/2010	15,972.00
28/02/2010-27/03/2010	18,585.60
28/03/2010-27/04/2010	22,551.04
28/04/2010-27/05/2010	21,155.20
28/05/2010-27/06/2010	11,250.86
28/06/2010-27/07/2010	9,605.03
28/07/2010-27/08/2010	8,610.38
28/08/2010-27/09/2010	7,035.85
28/09/2010-27/10/2010	14,858.60
28/10/2010-27/11/2010	13,937.20
28/11/2010-31/12/2010	32,501.00
01/01/2011-27/01/2011	24,443.20
28/1/2011-27/02/2011	16,262.20
total	**223,104.17**

As for the calculation of $EG_{GridtoPJ,y}$ (Electricity imported by the Project from the North China Power Grid), PP use Electricity consumed by the Project and other projects from the grid as per the registered CDM PDD. The last month sales receipts provided by the local grid company covering the period from 19/02/2011 to 19/03/2011 and the period from 28/02/2011 to 19/03/2011 is beyond this monitoring period, PP chose the record from 19/02/2011 to 19/03/2011 in $EG_{GridtoPJ,y}$ calculation is conservative and acceptable. The monitoring result of $EG_{GridtoPJ,y}$ is presented as the following table:

Table 4-3: The monitoring result of $EG_{GridtoPJ,y}$

Period	$EG_{GridtoPJ}$(MWh)
23/12/2009-17/01/2010	79.20
17/01/2010-20/02/2010	88.00
21/02/2010-17/03/2010	79.20
18/03/2010-17/04/2010	114.40
18/04/2010-17/05/2010	79.20
18/05/2010-17/06/2010	140.80
18/06/2010-17/07/2010	202.40
18/07/2010-17/08/2010	202.40
18/08/2010-14/09/2010	264.00
15/09/2010-19/10/2010	176.00
20/10/2010-09/11/2010	52.80
10/11/2010-19/12/2010	193.60
20/12/2010-01/01/2011	44.00
19/01/2011-19/02/2011	114.40
19/02/2011-19/03/2011	140.80
sum	**1,971.20**

So,

BE_y=($EG_{PJtoGrid,y}$ - $EG_{GridtoPJ,y}$)× EF_y

=(223,104.17-1,971.20)X0.950225tCO$_2$e

=210,126tCO$_2$e

4.3.2 Project Emissions

The Project is a zero-emission renewable electricity generating activity. As per the registered CDM PDD and the methodology ACM0002, no emission from the project activity was identified, and $PE_y = 0$.

4.3.3 Leakage

According to the methodology ACM0002, the project leakage is not considered, and therefore, L_y =0.

4.3.4 Summary of GHG Emission Reductions and Removals

The emission reductions achieved by this project is calculated as the following formula:

ER_y=BE_y–PE_y–L_y

=210,126tCO$_2$e-0tCO$_2$e-0tCO$_2$e

=210,126tCO$_2$e

During this verification, CQC team found that the explanation on the increase rate of actual emission reduction in the MR version 01 comparing with the ex-ante estimated emission reductions in registered PDD is not sufficient and transparent. With respect to this issue, ***CL02*** was raised during this verification and successfully closed out by PP. (Detailed information about this CL please see table 3-3 above and the revised MR version 02.) As a result, CQC team

confirms that the clarification on this increase is sufficient and reliable and the ER calculation is accurate and conservative.

4.4 Management and Operational System

As per the registered PDD and the CDM Project Monitoring Management Manual[/7/] has clearly prescribed the management and operational procedures.

The monitoring of the emission reductions is carried out according to the scheme shown in figure 3. Project owner holds the overall responsibility for the monitoring process. The plant operation staff record the electricity exported to and imported from the grid and also keep record of daily operations of the Project.

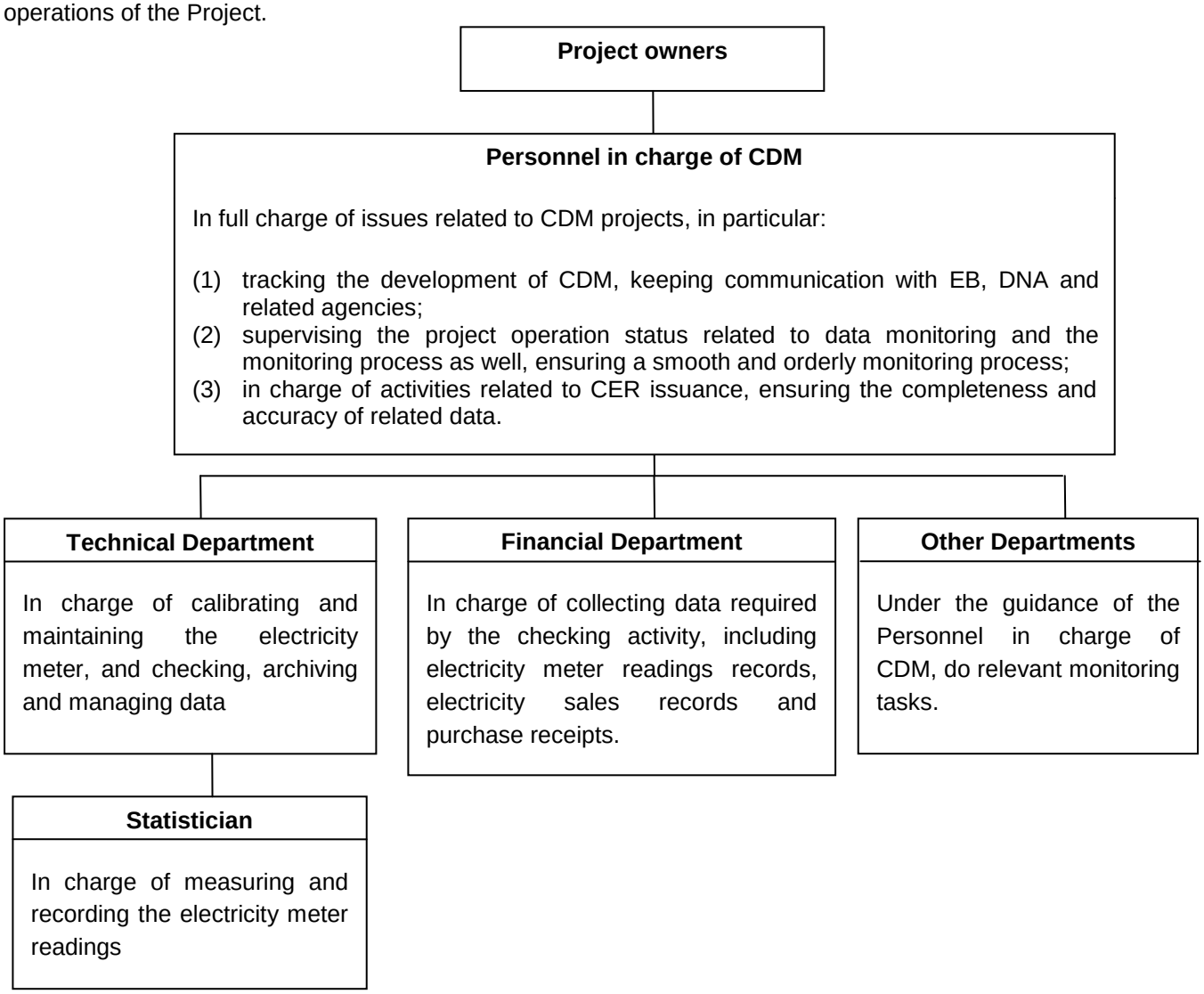

Figure 4-2. Management Structure of Monitoring Plan

Through the on-site visit and reviewing of documentations mentioned before, CQC team confirmed that all the above responsibilities were implemented well and in accordance with the monitoring plan in the registered PDD.

CQC team has also checked the training record[/34/] and found that the training was conducted in compliance with the monitoring plan.

Therefore, CQC team confirms that the monitoring is in accordance with the monitoring plan in the registered PDD.

5 VERIFICATION CONCLUSION

CQC has performed a verification of Beijing Guanting Wind Power Project Phase II and Phase II addition. The verification is based on the currently valid VCS Standard (version 3.1/3.2) released by Voluntary Carbon Standard Association on 15/07/2011.

Beijing Jingneng Clean Energy Co., Ltd. is responsible for the project implementation and operation, preparation of the GHG emissions data and reporting the GHG emission reductions of the Project on the basis set out within the monitoring plan in the registered CDM PDD. The development and maintenance of records and reporting procedures are in accordance with the plan. The calculation and determination of GHG emission reductions from the Project is the responsibility of the management of the project.

CQC verified the VCS Monitoring Report version 01 dated 25/10/2011, version 02 dated 07/03/2012 for the reporting period and the result is indicated below. CQC confirms that the project is implemented as planned and described in the PDD. Installed equipment being essential for generating emission reductions runs reliably. The monitoring system was in place and in good condition during the onsite visit.

CQC can confirm that the GHG emission reductions are calculated without material misstatements. Our opinion is related to the Project's GHG emissions and the resulting GHG emission reductions reported, as well as the project baseline, monitoring activity and its associated documents. Based on the information we have seen and evaluated, we confirm the actual amount of VCUs associated with the project specific monitoring report that has been verified as the following statement:

Emission reductions in total (29/12/2009 to 27/02/2011): ***210,126*** VCUs.

GHG Emission Reductions or Removals	tCO_2e
Baseline Emissions	***210,126***
Project Emissions	*0*
Leakage	*0*
Net GHG emission reductions or removals	***210,126***

Table 5-1 Document list during verification

Reference	Documents
1	VCS (version 3.1/3.2)
2	The monitoring report covering the monitoring period from Dec.23rd, 2009 to Feb.27th, 2011. Version 01. Dated Oct. 25th 2011.
3	The monitoring report covering the monitoring period from Dec.23rd, 2009 to Feb.27th, 2011. Version 02. Dated Mar.7th 2012.
4	The registered CDM PDD of this project, version 05.4, dated Jan.13th 2011.
5	The registered CDM validation report of this project, version 04.1,dated Jan.24th 2011.
6	CDM VVM ver.01.2
7	Beijing Jingneng Clean Energy Co., Ltd., CDM Monitoring & QC Manual, Dec. 2009.
8	ACM0002 (Version 11) – "Consolidated baseline methodology for grid-connected electricity generation from renewable sources".
9	The electricity measurement certification issued by local grid company, dated Jun.14th 2011.
10	The PPA signed between the project owner and Beijing grid company.
11	The daily record of the metering system by the project owner.
12	The ER calculation spreadsheet
13	Calibration certificates of meters M5 and M6 dated 01/12/2009, 20/04/2010 and 01/01/2011.
14	The accreditation certificate of Beijing Electronic Metrological Measuring Institute dated Jul.14th 2009.
15	Calibration certificates of meters M7 and M8 dated 01/12/2009, 20/04/2010 and 01/01/2011.
16	Calibration certificates of meters M1 and M3 dated 13/11/2009, 20/04/2010 and 01/01/2011.
17	Calibration certificates of meters M2 and M4 dated 13/11/2009, 20/04/2010 and 01/01/2011.
18	Calibration certificates of meters M14 and M14' dated 19/08/2010 and 20/12/2010.
19	The training records of the personnel involved in CDM of the project.
20	The wind speed from 1977 to 2006 from Huailai Meteorological Station
21	The wind speed from Dec, 2009 to Feb, 2011 from Huailai Meteorological Station